Tap Eos Neo Pull Down Side HP CP | 115.0628.254

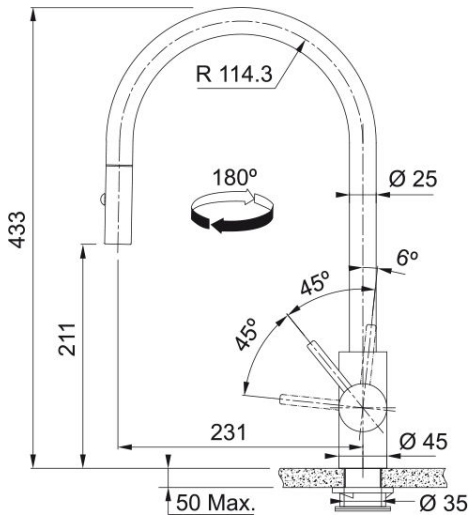

Product Information	
Spout version	J - spout
Color	Copper
Type of material	Stainless steel 304
Flexible pullout hose material	Nylon black
Shower material	stainless steel
Dimensions	
Tap hole diameter	35 mm
Cartridge dimension	35 mm
Height overall	433.0
Installation	
Fixation type	shank
Water supply hose connection	3/8"
Water supply hose length	450 mm
Product specifications	
Pressure	High Pressure
Version	Spray
Tap operation	side lever
Tap rotation	180°
Article Number	
Product brand	FRANKE
Product family	Mythos
Model range	EOS NEO
Properties	
Eco water saving	no
Type of aerator	Laminar

Technical Data